97807453
mathspercyyeung

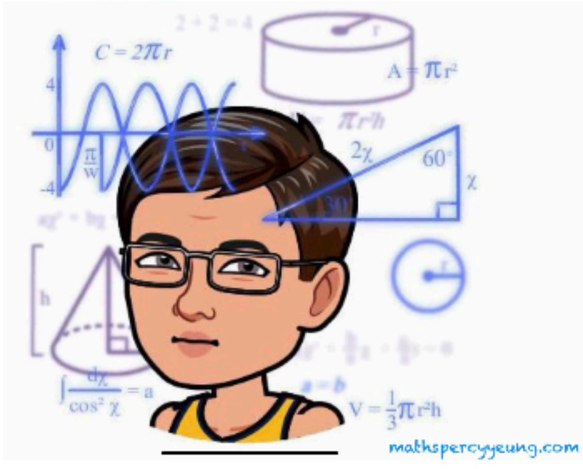

Form 1
173 students

Final Examination 2023-2024

MATHEMATICS
Paper I
Time Allowed: 1 hour 30 minutes

Class: _____ Class No.: _____ Division: _____ Name: _____

Please read the following <u>instructions</u> very carefully.

1. Write your class, class number, name and division in the spaces provided on this cover.
2. This paper carries 100 marks. Attempt ALL questions in this paper. Write your answers in the spaces provided in this Question-Answer Paper.
3. ***ALL*** working must be clearly shown.
4. The diagrams in this paper are not necessarily drawn to scale.

For Markers' Use Only	
Question No.	**Marks**
1	(6)
2	(4)
3	(3)
4	(7)
5	(7)
6	(7)
7	(8)

For Markers' Use Only	
Question No.	**Marks**
8	(6)
9	(6)
10	(7)
11	(5)
12	(9)
13	(8)
14	(8)
15	(9)
Total	(100)

1. (a) Simplify $(-8+9x)-3(2x-1)$. (2 marks)

   (b) Hence, expand $(x-4)[(-8+9x)-3(2x-1)]$ and arrange the terms in descending powers of x. (4 marks)

2. (a) Simplify the expression $m^2-3m-20m^2 \div 4+11m$. (2 marks)

   (b) Find the value of $m^2-3m-20m^2 \div 4+11m$ if $m=-1$. (2 marks)

3. Solve $y-35=\frac{y}{2}+\frac{y}{4}$. (3 marks)

4. The general term a_n of a sequence is $\frac{5-3n}{4}$.

(a) Find the 5th term and the 9th term of the sequence. (2 marks)

(b) Find the value of $4a_5-8a_9$. (2 marks)

(c) If $a_k=-7$, find the value of k. (3 marks)

5. Simplify the following, where all indices are positive integers.

(a) $\dfrac{(-2a^2b)^4}{4a^4b^6}$ (4 marks)

(b) $11^{2m+1} \div 11^{2m+3}$ (3 marks)

6. In the figure, A is a point on a rectangular coordinate plane.

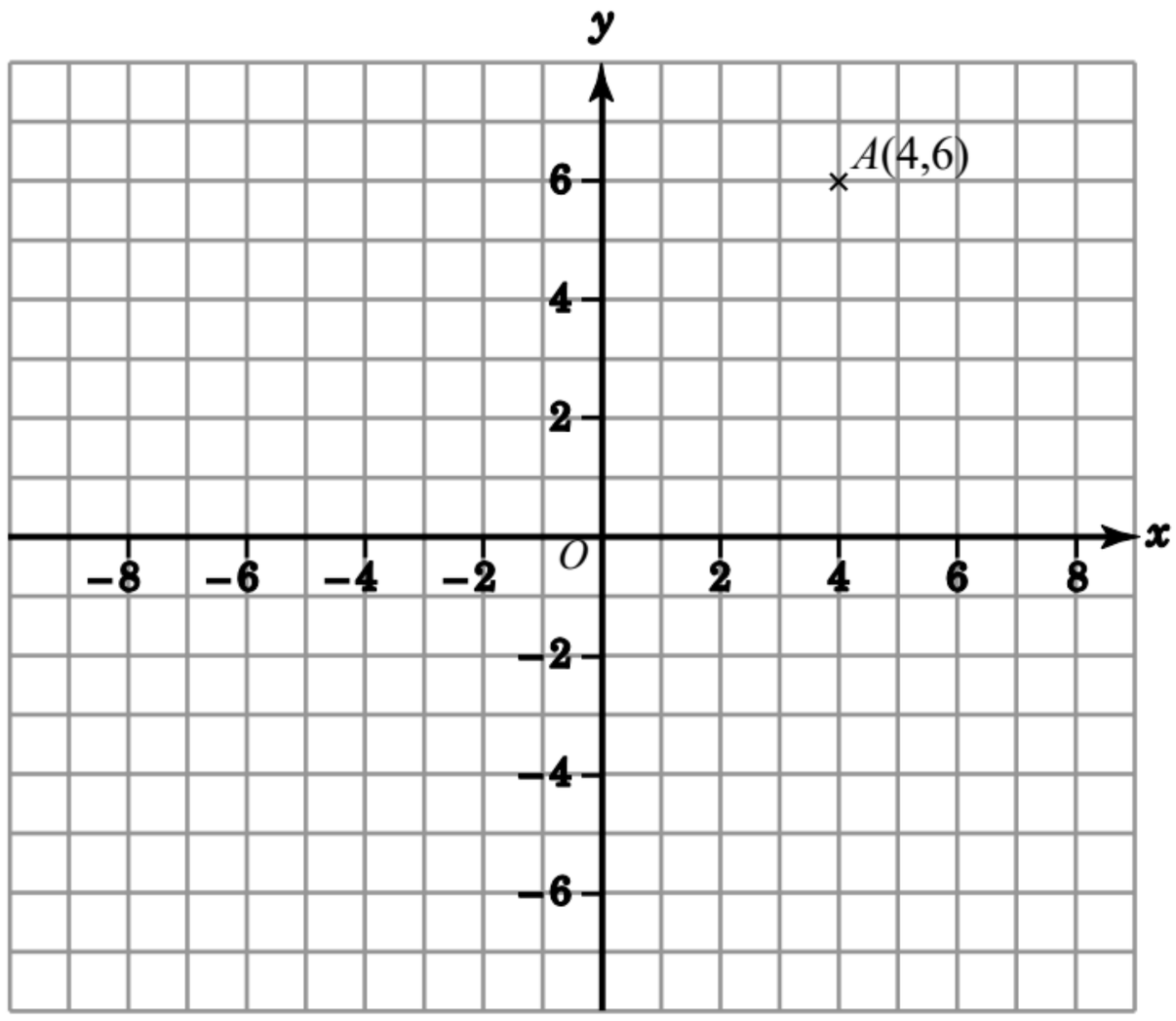

(a) $A(4, 6)$ is reflected with respect to the x–axis to obtain B. Write down the coordinates of B. (1 mark)

(b) If A is rotated anticlockwise about the origin through $90°$ to C, find the coordinates of C. (2 marks)

(c) C is translated rightward by m units to D such that the perpendicular distance of C to AB is the same as the perpendicular distance of D to AB.

(i) Find m. (2 marks)

(ii) Find the coordinates of D. (2 marks)

7. The figure shows a rectangular coordinate plane.

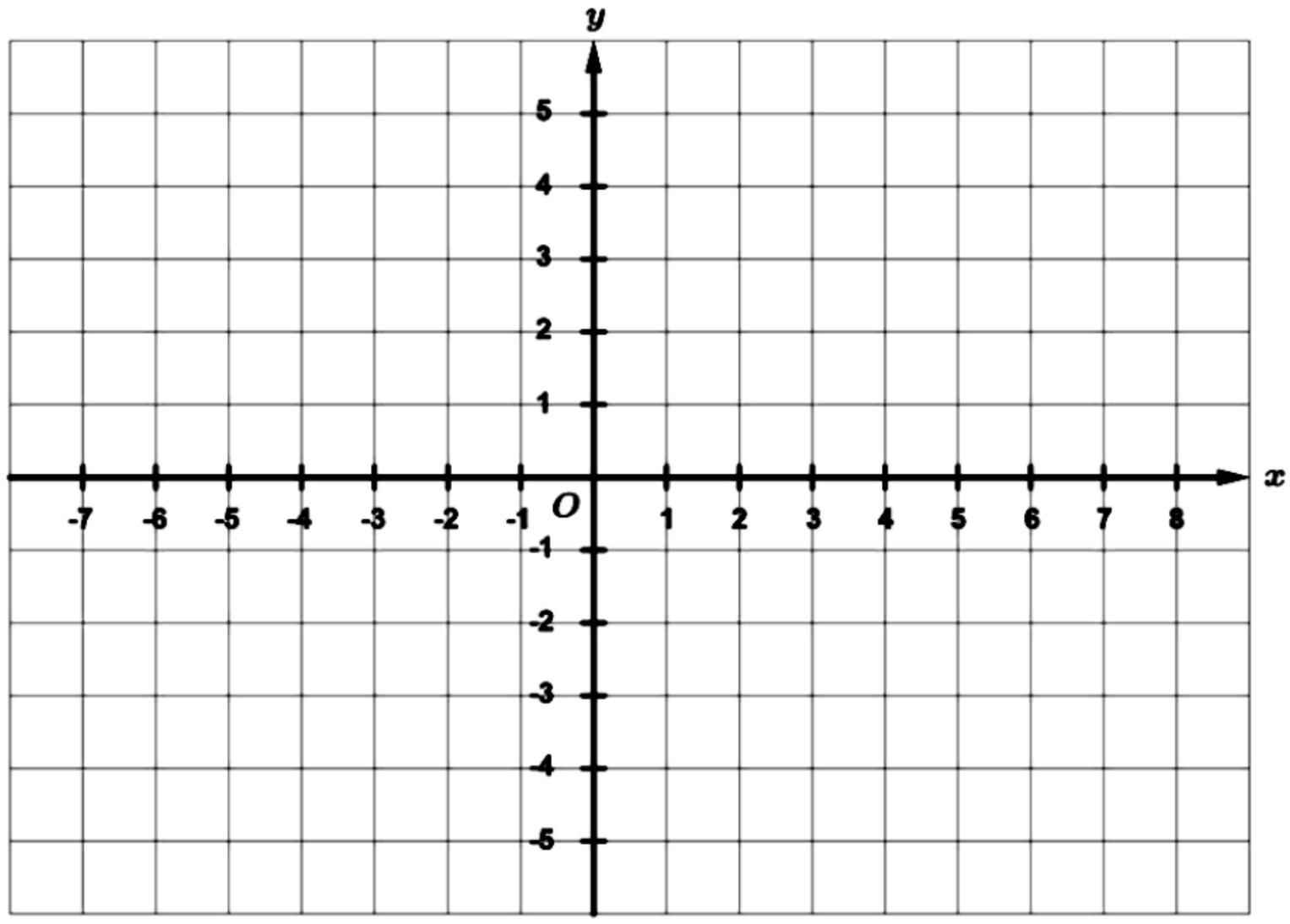

(a) (i) Plot the points $A(7, 3)$ and $B(-5, 3)$ on the rectangular coordinate plane. (2 marks)

(ii) Find the length of AB. (1 mark)

(b) (i) $ABCD$ is a rectangle where $AB = \frac{3}{2}AD$. Find the perimeter of rectangle $ABCD$.

(3 marks)

(ii) Write down all possible coordinates of C. (2 marks)

8. The figure shows a quadrilateral *ABCD* on a rectangular coordinate plane.

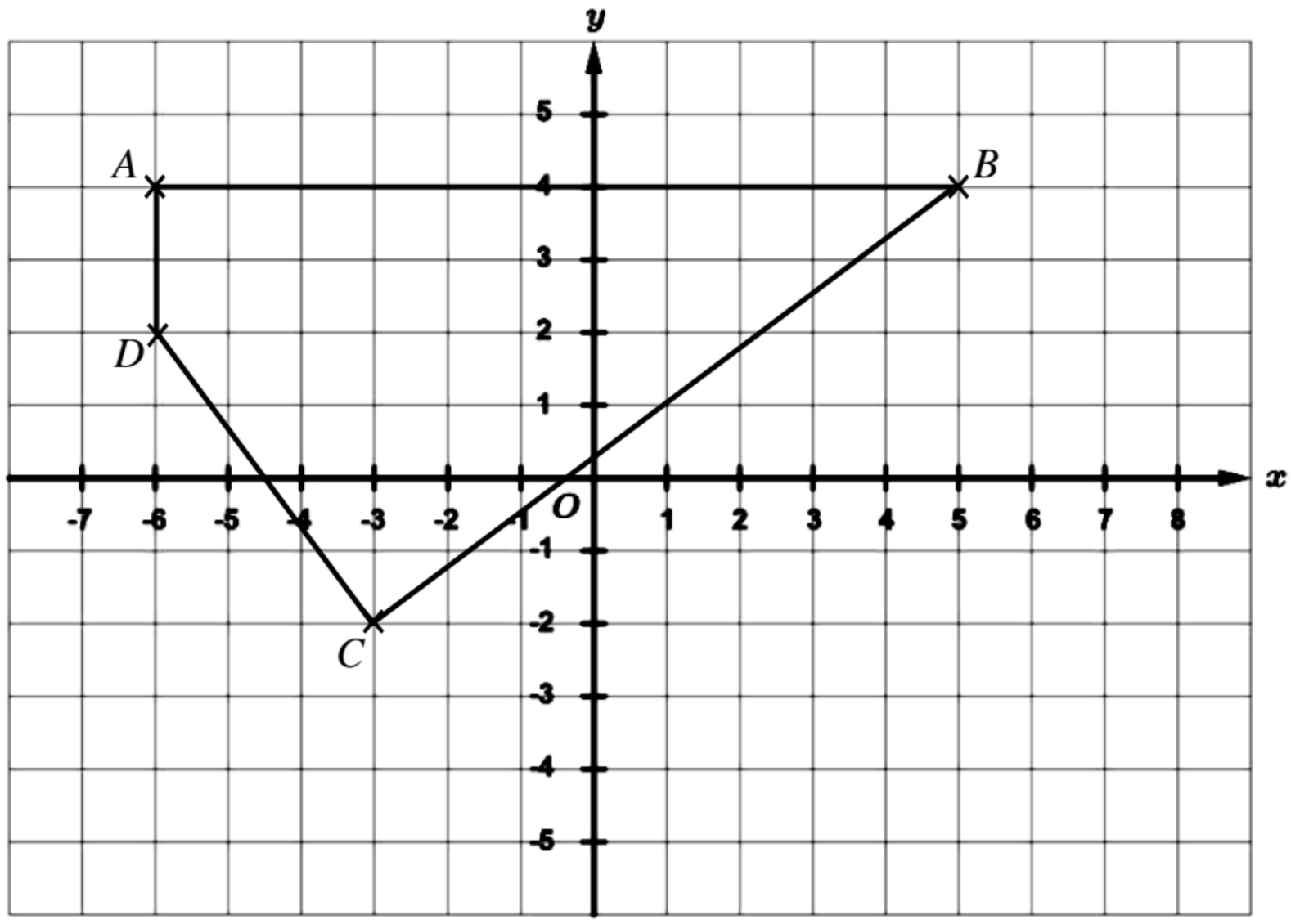

(a) Find the area of the quadrilateral *ABCD*. (2 marks)

(b) It is given that $BC = 10$ units and $\angle BCD$ is a right angle.

(i) Find the length of *CD*. (3 marks)

(ii) Find the perimeter of the quadrilateral *ABCD*. (1 mark)

9. Find the volume and the total surface area of the right prism as shown. (6 marks)

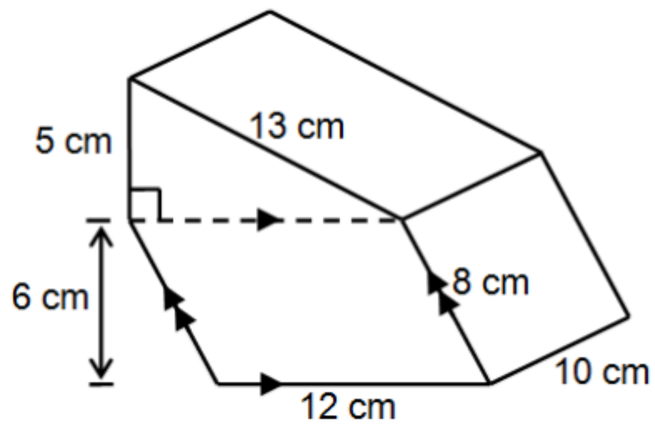

10. In the figure, it is known that $\triangle ABC \cong \triangle ADC$.

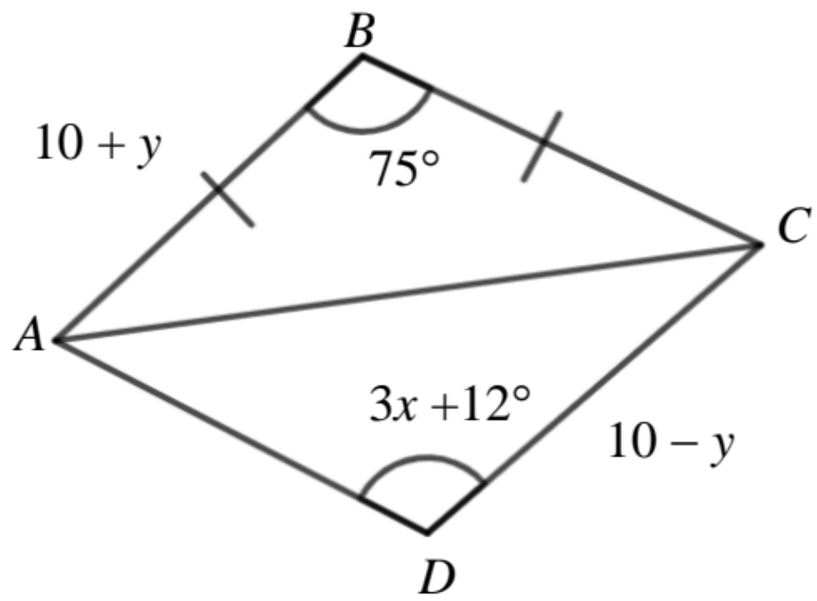

(a) Find the values of x and y. (4 marks)

(b) Find $\angle DAC$. (3 marks)

11. In the figure, EGD is a straight line and $AB//CG//FE$.

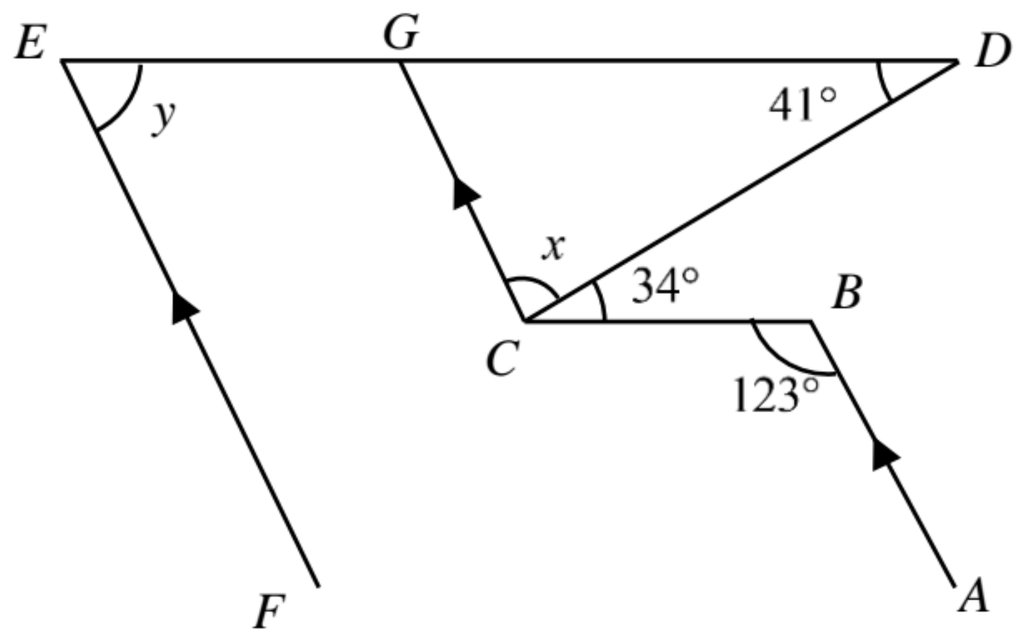

(a) Find the value of x. (2 marks)

(b) Find the value of y. (3 marks)

12. In the figure, FG cuts AC and BC at D and E respectively. It is given that $FG // HB$.

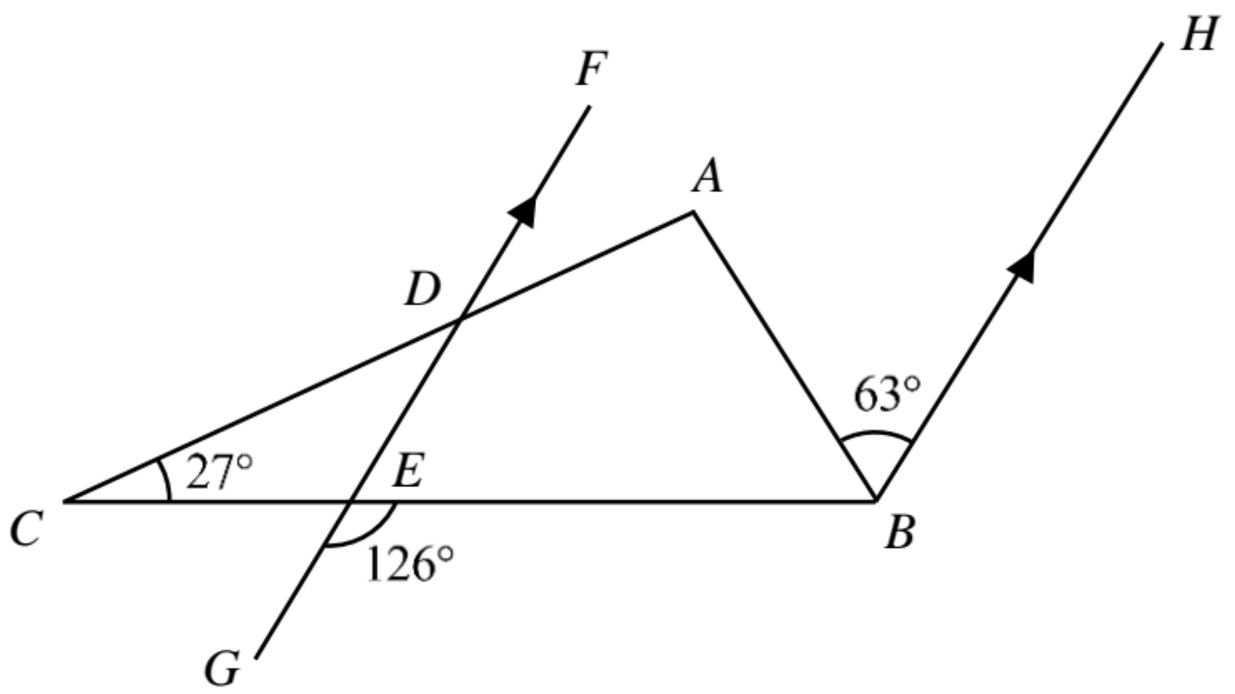

(a) Find $\angle CDE$. (3 marks)

(b) Prove that ΔABC is a right-angled triangle. (3 marks)

(c) Join FH. Prove that the sum of the interior angles of trapezium $BEFH$ is 360°. (3 marks)

13. In the figure, AGD, $BCDE$ and CGF are straight lines. $AD = CF$, $AB \perp BE$, $FE \perp BE$ and $BC = DE$.

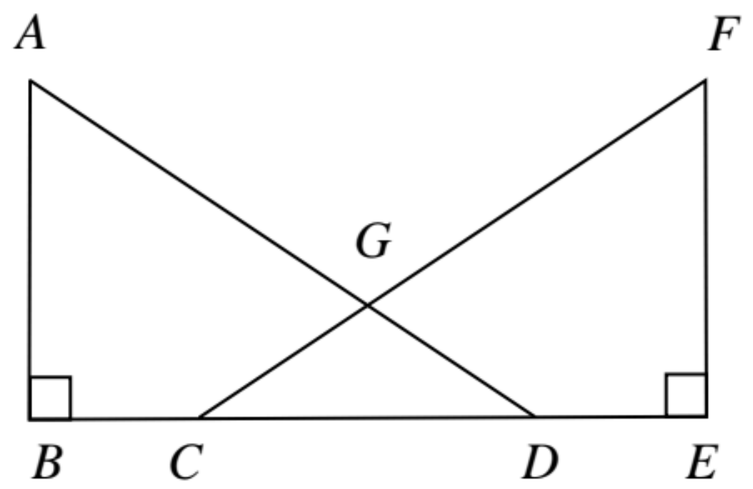

(a) Prove that $\triangle ABD \cong \triangle FEC$. (3 marks)

(b) Prove that $AG = FG$. (3 marks)

(c) It is given that $BE = 14$ and $CD = 6$, find BD. (2 marks)

14. In the figure, *ABC* is a triangle. The base and height of the triangle are $4x+8y$ and $9x-2y$ respectively.

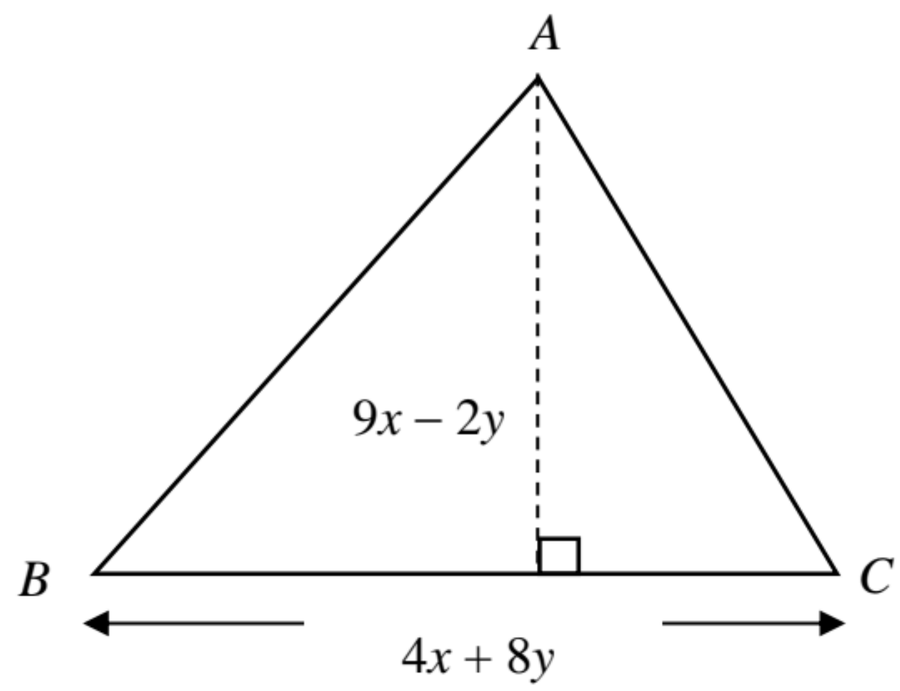

(a) Express the area of ΔABC in terms of x and y. (2 marks)

(b) A square *DEFG* of length $2x+3y$ is cut away from ΔABC to form polygon *ABDEFGC* as shown.

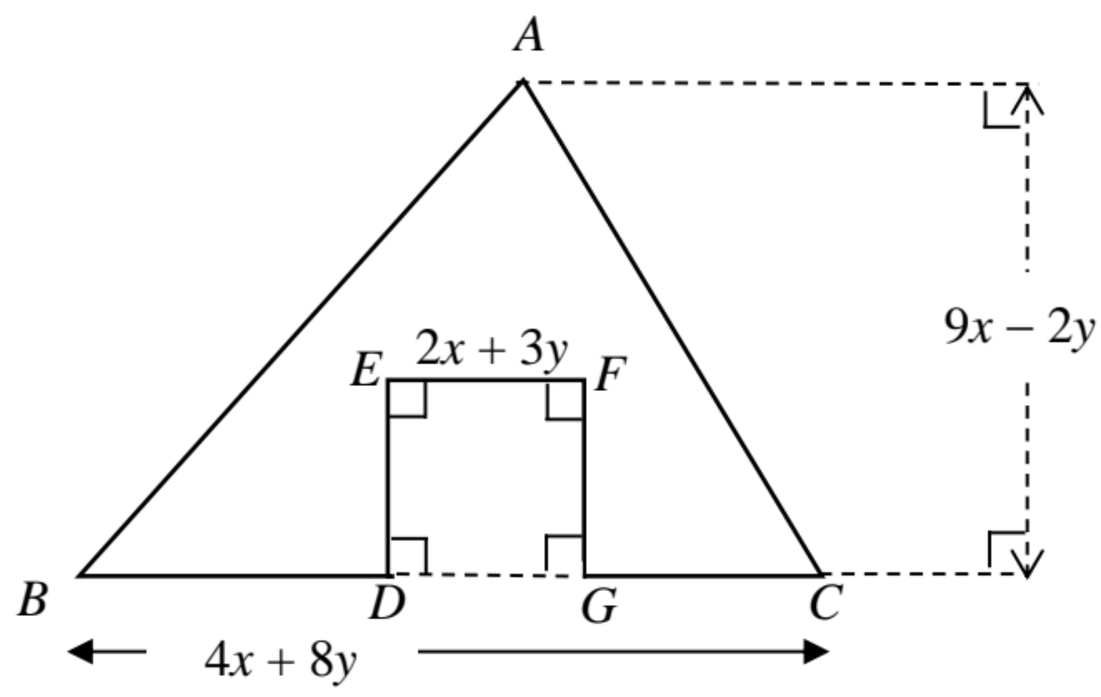

(i) Express the area of polygon *ABDEFGC* in terms of x and y. (4 marks)

(ii) Find the area of polygon *ABDEFGC* when $x = 5$ and $y = 4$. (2 marks)

15. The figure below shows a container in the shape of a right triangular prism. At the beginning, the container is empty. When 270 cm^3 of water is poured into the container, the depth of the water is h cm.

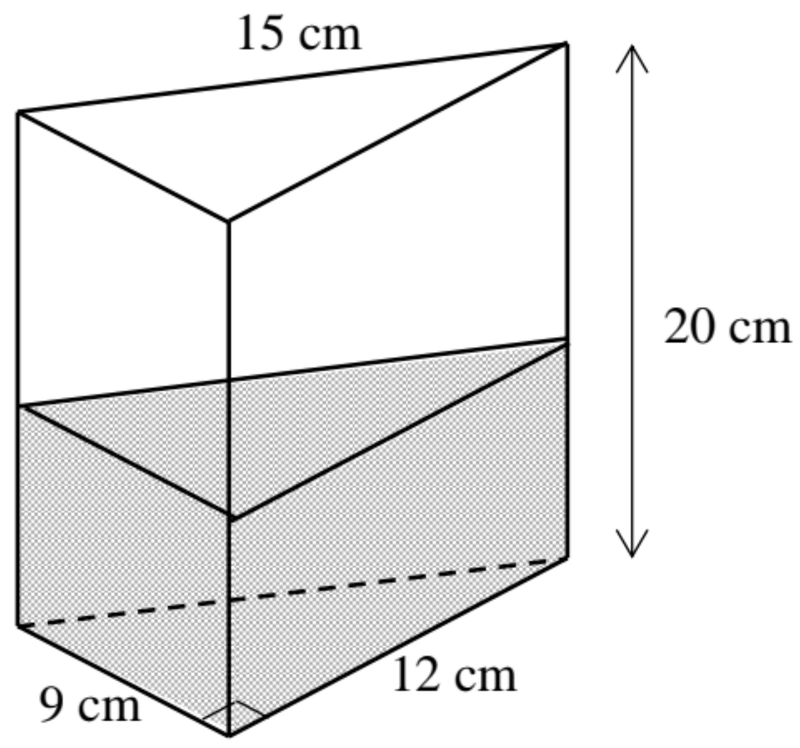

(a) Find the value of h. (2 marks)

(b) Find the area of the **wet surface** of the container. (4 marks)

(c) A metal ball is put into the container and it is totally immersed in the water. The area of the wet surface of the container is increased by 20%.

(i) Find the rise in water level. (2 marks)

(ii) Find the volume of the metal ball. (1 mark)

--- End of Paper ---